8403.**

2.8 (.110) TYPE SERIES · RECEPTACLES FOR CONNECTOR

Specification 2.8 mm Timer Terminal

Wire size mm² (AWG) 1,5 (16)

Ø Insulation (mm) 3,4 SEAL

Materials, temperature and contact resistance

Part nr.	Material	Finishing	Max. Temp. (ºC)
8403.31	Bronze	Pre-tin-plated	130

Material thickness (mm) 0,32

Max. rated current

Wire section	8403.31
1.50 mm²	8A

Application tool MN8403

Wire strip length 3.8 (±0.5) mm

Crimping parameters & pull out force

Wire section (±10%)	Conductor		Insulator	Pull-out force (N)
	Height (mm)	Width (mm)	Width (mm)	
1.50 mm²	1.65 (±0.05)	2.34 (±0.05)	SEAL 3.4	150N @ 60s

Values only valid for the application tool specified upwards. The insulator widths are only indicative as they are dependent on the sheath thickness of the wire used.

Winding number 3500

Compatible connectors 21002**

Approvals

RoHS

Drawing

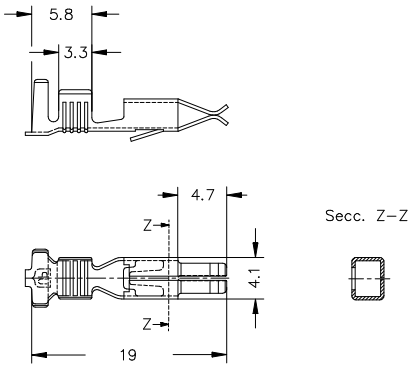

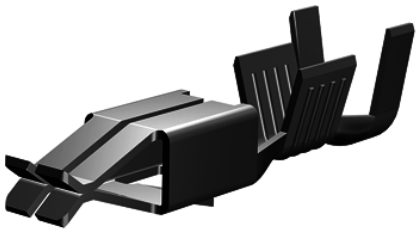

8403.**

2.8 (.110) TYPE SERIES · RECEPTACLES FOR CONNECTOR

Disclaimer

Data obtained from Escubedo Laboratory essays, using own methodology, cablings, equipment and original crimping tools, done in laboratory conditions and following the indicated standards, errors and omissions excepted. This document has no contractual meaning and it is publicised only for informative purposes. It can be changed without prior notice. The end customer has the sole responsibility to check these characteristics in its environment and with its own components, manufacturing methods and equipment. See also the full range product overview if available. For further information please visit our web site or contact us

Rev. Nr.	Concept	Date	Created/Revised	Approved
A1	Datasheet generated automatically [A1]	2018-10-04	Laboratory Dept.	E. Roura

Especialitats Elèctriques Escubedo S.A.U. · Ctra. de Girona-Olot Km. 35,5 · 17843 Riudellots de la Creu · Girona · Spain
Tel.: 34 972 171 706 · Fax: +34 972 171 714 · info@escubedo.com · www.escubedo.com