4720F**

6.3 (.250) TYPE SERIES · RECEPTACLES

SELF-LOCKING RECEPTACLES

Specification

Standard self-locking terminals for connector disconnection

For male (mm)

6,3x0,8

Wire size mm² (AWG)

0,2-0,6 (24-20)

Ø Insulation (mm)

1,8-2,5

Materials, temperature and contact resistance

Part nr.	Material	Finishing	Max. Temp. (ºC)
4720F00	Brass	Natural	110
4720F02	Brass	Tin plated	120
4720F30	Bronze	Natural	120
4720F32	Bronze	Tin plated	130

Material thickness (mm)

0,4

Max. rated current

Wire section	4720F00 / 02 / 30 / 32
0.50 mm²	8A
0.60 mm²	8A

Insertion / Withdrawal forces

	4720F00 / 02 / 30 / 32
1st Insertion (max)	35N[1]
1st Withdrawal (max)	30N[1]
1st Withdrawal (min, locking enabled)	90N[1]

[1] Valid for Natural Brass Tab

Secutiry function

Self-locking function prevents disconnection by pulling the cable.
Disconnection is possible disabling the locking function, pressing the lever manually or sliding the connector (see withdrawal forces).
It allows several connections-disconnections maintaining the functional features.

Wire strip length

5.5 (±0.5) mm

Crimping parameters & pull out force

Wire section (±10%)	Conductor		Insulator	Pull-out force (N)
	Height (mm)	Width (mm)	Width (mm)	
0.20 mm²	1.20 (±0.03)	2.06 (±0.03)	3.07 (±0.10)	28N @ 60s
0.35 mm²	1.25 (±0.03)	2.07 (±0.03)	3.07 (±0.10)	40N @ 60s
0.50 mm²	1.30 (±0.03)	2.07 (±0.03)	3.08 (±0.10)	56N @ 60s
0.60 mm²	1.35 (±0.05)	2.07 (±0.05)	3.08 (±0.10)	56N @ 60s

Values only valid for the application tool specified upwards. The insulator widths are only indicative as they are dependent on the sheath thickness of the wire used.

Winding number

8000

Compatible connectors

26312**, 26388**

Approvals

RoHS

4720F**

6.3 (.250) TYPE SERIES · RECEPTACLES

SELF-LOCKING RECEPTACLES

Drawing

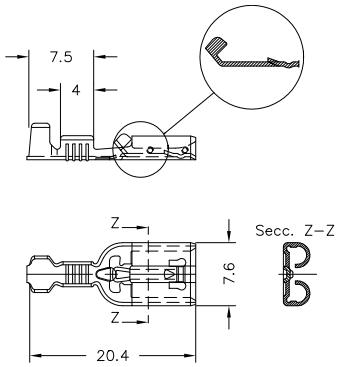

Disclaimer

Data obtained from Escubedo Laboratory essays, using own methodology, cablings, equipment and original crimping tools, done in laboratory conditions and following the indicated standards, errors and omissions excepted. This document has no contractual meaning and it is publicised only for informative purposes. It can be changed without prior notice. The end customer has the sole responsibility to check these characteristics in its environment and with its own components, manufacturing methods and equipment. See also the full range product overview if available. For further information please visit our web site or contact us

Rev. Nr.	Concept	Date	Created/Revised	Approved
A3	Crimping parameters &pull out force updated	2021-04-09	E.Roura (laboratory dept.)	M.Codina (engineering dept.)
A2	Secutiry function updated	2021-02-22	E.Roura (laboratory dept.)	M.Codina (engineering dept.)
A1	Datasheet generated automatically [A1]	2020-11-16	E.Roura (Laboratory dept.)	M.Codina (Engineering dept.)

Especialitats Elèctriques Escubedo S.A.U. · Ctra. de Girona-Olot Km. 35,5 · 17843 Riudellots de la Creu · Girona · Spain
Tel.: 34 972 171 706 · Fax: +34 972 171 714 · info@escubedo.com · www.escubedo.com